I/O Frontend Processor

sat-nms IO-FEP

User Manual

Version 3.0.006

SatService Gesellschaft für Kommunikationssysteme mbH
Hardstrasse 9
D-78256 Steisslingen

satnms-support@satservicegmbh.de

www.satnms.com
www.satservicegmbh.de
Tel +49 7738 99791-10

Table Of Contents

sat-nms IO-FEP User Manual

Version 3.0.006 -- 2021-07-29 -- © 2007-2021 SatService GmbH

Abstract

> The IO-FEP manufactured by SatService GmbH is a frontend-processor which is especially designed for satellite ground stations. It allows to supervise potential-free (alarm-) contacts, to switch external items, to measure different temperatures, to switch and control waveguide- or coaxial-switches. It is possible to assign the inhibit-contacts of the waveguide-switches to up to 10 connected HPAs and additionally it is possible to realize different 1 to n redundancy systems.
>
> This document describes how to install, setup and operate this antenna controller.

Table Of Contents

1 Introduction

The IO-FEP manufactured by SatService GmbH is a frontend-processor which is especially

designed for satellite ground stations. It allows to supervise potential-free (alarm-) contacts, to switch external items, to measure different temperatures, to switch and control waveguide- or coaxial-switches, it is possible to assign the inhibit-contacts of the waveguide-switches to up to 10 connected HPAs and additionally it is possible to realize different 1 to n redundancy Systems.

The IO-FEP is available in two different versions: The IO-FEP is the standard version, the IO-FEP-E is the extended version with a larger quantity of digital input and waveguide-switch interfaces. The IO-FEP supervises altogether 32 (IO-FEP-E: 48) digital-inputs via optocoupler. Up to 4 different temperatures can be measured with external PT1000 sensors. To switch external units, the IO-FEP has 6 potential-free relay outputs and 10 photomos-relay outputs. The 8 (IO-FEP-E: 16) waveguide-switches that can be controlled by the IO-FEP are supervised by their position and switching state (for muting the HPA in the switching moment). Also the IO-FEP contains an inhibit matrix, that allows to allocate different inhibit signals of waveguide-switches on different HPAs. So it is possible to mute up to 10 HPAs by up to 8 (IO-FEP-E: 16) waveguide-switches. The IO-FEP also contains a software-inhibit matrix. If the used waveguide-switches are not equipped with an inhibit-contact, nevertheless the connected HPA's can automatically be muted by software.

The data output is provided by 2 different and parallel available interface types: a HTTP Web Interface via an internal Web Server, and a RS232 interface. The ***sat-nms*** IO-FEP is controlled remotely by a monitoring and control application through the TCP/IP interface. The IO-FEP implements the protocols HTTP (for both, the user interface and for remote control) and SNMP. The ***sat-nms*** IO-FEP MIB may be downloaded from the IO-FEP itself using FTP.

This document is the user manual provided with the ***sat-nms*** IO-FEP It contains all necessary information how to install, setup and operate the processor. The user manual is available as a printed document and for online reading on the IO-FEP itself as well.

The paragraphs below give a short overview to the contents of this manual.

- Installation : The installation chapter guides through the installation and setup of the ***sat-nms*** IO-FEP. It describes the mechanical concept of the IO-FEP box and the assignment of the connectors. Finally you learn in this chapter how to set the IO-FEP's IP address, which is a essential precondition to operate the IO-FEP by means of a web browser. This section is available in the printed version only.
- Operation : The ***sat-nms*** IO-FEP is operated using a standard web browser like the Internet-Explorer on MS Windows based computers. The user interface design is straight forward and clearly structured. Operating the IO-FEP is mostly self-explanatory. Nevertheless, the 'Operation' chapter outlines the map of web pages which make up the IO-FEP user interface and elaborately describes the meaning of each alterable parameter.
- Remote Control : The ***sat-nms*** IO-FEP provides a versatile remote control interface. A monitoring & control software may fully operate the IO-FEP either through a TCP/IP network connection or through the RS232 interface of the IO-FEP. This chapter describes the communication protocol used for remote control and lists all parameters accessible through the remote interface.
- Connector Reference : This chapter provides a comprehensive reference of the ***sat-nms*** IO-FEP' input / output connectors.
- Specifications : At the end of the document, the specifications applicable to the ***sat-nms*** IO-FEP are summarized in this chapter.

Support and Assistance

If you need any assistance regarding our ***sat-nms*** IO-FEP, don't hesitate to contact us. We would

be pleased to help you by answering your questions.

satnms-support@satservicegmbh.de

```
SatService GmbH
Hardstrasse 9
78256 Steisslingen
Germany
phone +49 7738 99791-10
fax +49 7738 99791-99
www.satnms.com
```

2 Installation

This chapter describes how to install the ***sat-nms*** IO-FEP. You find a guide how to connect, configure and mechanically mount the IO-FEP below.

Before you start, please first read the Safety Instructions chapter below. It contains some important recommendations to prevent damage from the IO-FEP.

Then, we strongly recommend to do a first setup of the IO-FEP on a lab desk before installing it at it's final location. This is mainly for one reason:

1. To setup the processor's IP parameters, the PC used for configuring and the IO-FEP must either be connected to the same Ethernet hub or must be connected directly with a crossover cable. The initialization program does not work through routers intelligent network switches.

Hence, the typical sequence of tasks when putting an ***sat-nms*** IO-FEP into operation is as follows:

1. Read the chapter Safety Instructions
2. Set the device's IP address
3. Mechanically mount the device.
4. Connect the IO-FEP at it's destination environment.

2.1 Safety Instructions

Failure to observe all Warnings and Cautions may result in personnel injury and/or equipment damage not covered by the warranty.

- Follow standard Electrostatic Discharge (ESD) procedures when handling a ***sat-nms*** IO-FEP.
- Select and apply the appropriate 24V D/C voltage according to the data sheet and documentation **before** connecting power.
- Before you connect the IO-FEP to another unit, please make sure that the unit to which you connect can handle the voltage provided by the ***sat-nms*** IO-FEP.
- The ***sat-nms*** IO-FEP can be damaged if the input voltage is higher than the specified maximum value.
- Do not connect units that can be damaged by the output voltage of the ***sat-nms*** IO-FEP.
- In case of a failure do not open the device, you will loose warranty, call SatService GmbH for an RMA number.

- Observe normal safety precautions when operating, servicing, and troubleshooting this equipment.
- Take standard safety precautions with hand and/or power tools.

2.2 Setting the IP Address

Before you can operate the IO-FEP, you need to set the processor's IP address. There is a special configuration program on the documentation CD shipping with the IO-FEP for this purpose. We recommend to configure the processor's TCP/IP settings before you install the IO-FEP at it's final place. To configure the IO-FEP, the following equipment is required:

- The ***sat-nms*** IO-FEP itself
- 2 24V D/C power supplies (If you want to build a redundancy Power supply, you need 4 24V D/C power supplies)
- A Computer running a Microsoft Windows operating system equipped with CD-ROM drive and Ethernet network card.
- A CAT5 crossover network cable or a Ethernet hub and standard network cables to connect the IO-FEP and the computer.
- The CD-ROM shipping with the ***sat-nms*** IO-FEP.

Setting the IO-FEPs IP parameters now is easily done within a few minutes.

1. First install a network cable between the IO-FEP and your computer. If you have a crossover cable available, this is very easy: simply put the cable into the network connectors of computer and IO-FEP. Without a crossover cable, you need to connect both, the computer and the IO-FEP to the same network hub using two standard network cables. It is essential, that the computer and the IO-FEP are connected to the same network segment, the configuration program is not able to find the IO-FEP through routers or network switches.

2. Now power on your computer and connect the IO-FEP to the 24V D/C supply.

3. Insert the CD-ROM into the computer's drive and inspect it's contents through the 'My Computer' icon on your desktop. Double-click to the 'ChipTool.exe' program in the 'ChipTool' directory.

4. When the ChipTool program is running, type CTRL+F to make the program search the IO-FEP. The program shows a list containing at least one entry describing the actual network parameters of the IO-FEP.

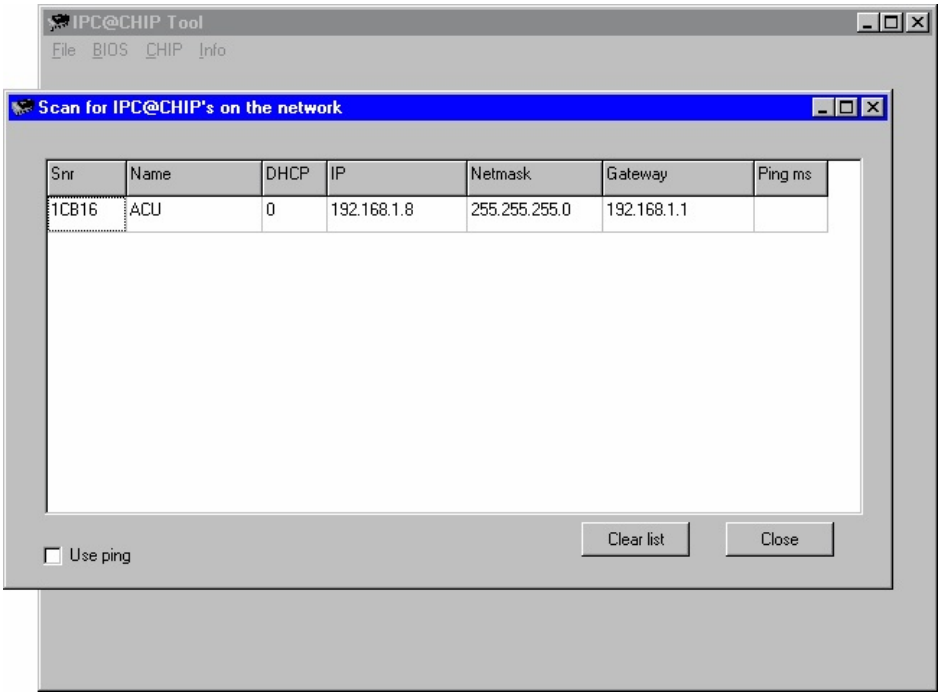

5. The serial number shown in the first column of the list, must match the serial number printed on the processor's enclosure. If the list stays empty, the IO-FEP is not connected properly. If there are more entries in the list, the configuration program has found other devices in this network segment which use the same technology.

6. Now type CTRL+I to open the IP configuration window of the program. In this form enter the processor's serial number, it's new IP address and network mask. If the IO-FEP later shall be operated through a router, enter the address of the router on the gateway field, otherwise leave this field blanc. Be sure, that the 'DHCP' mark is unchecked. Finally click to the 'Yes' button to set the new parameters at the IO-FEP

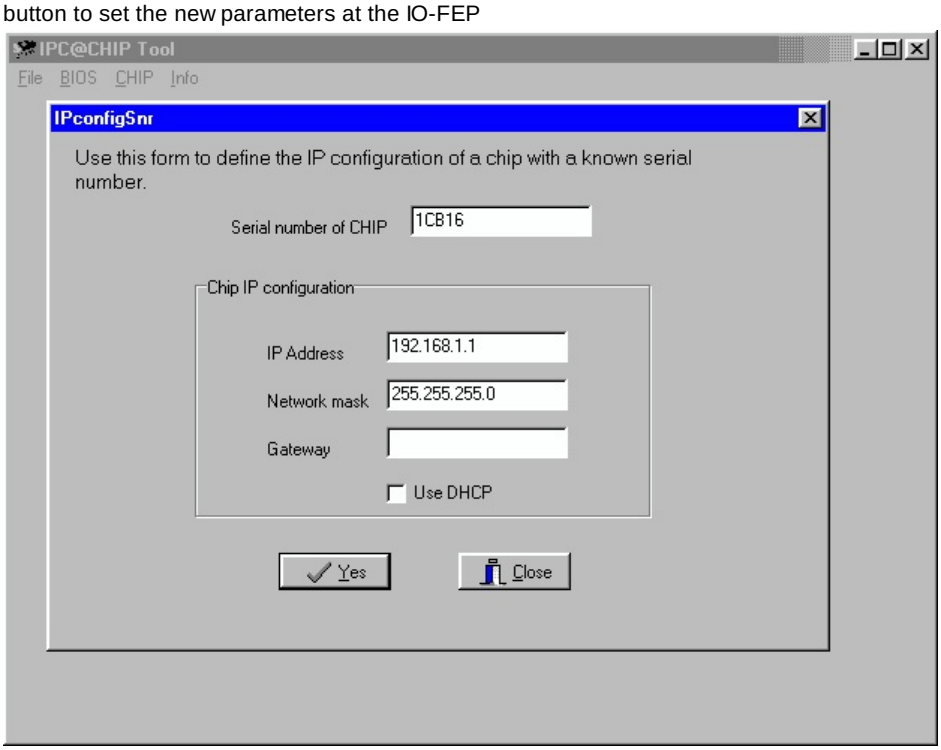

Now the IP configuration of the processor is completed. You may finally want to test if the IO-FEP is reachable now. Start your web browser and type the processor's IP address into the URL field of the browser. The IO-FEP should reply with it's main page, provided that the processor and your computer are configured for the same subnet.

2.3 Connecting the IO-FEP

As written in the introduction, the ***sat-nms*** IO-FEP is available in two different versions. The diagram below shows the layout of the IO-FEP's connectors:

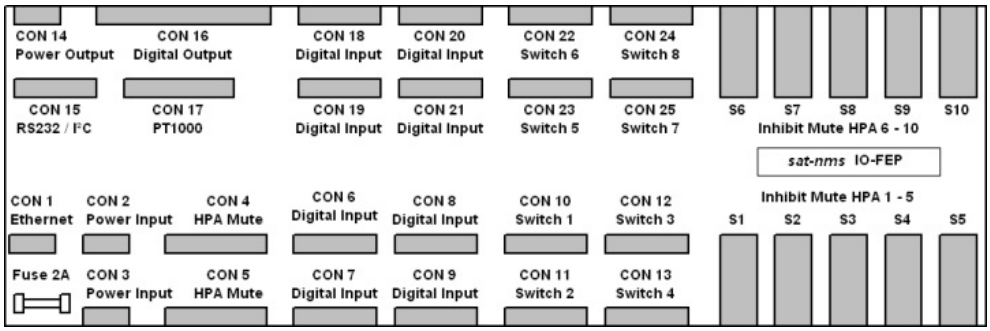

The following diagram shows you the layout of the IO-FEP-E's connectors. For better overview the top-view is splitted in two pictures.

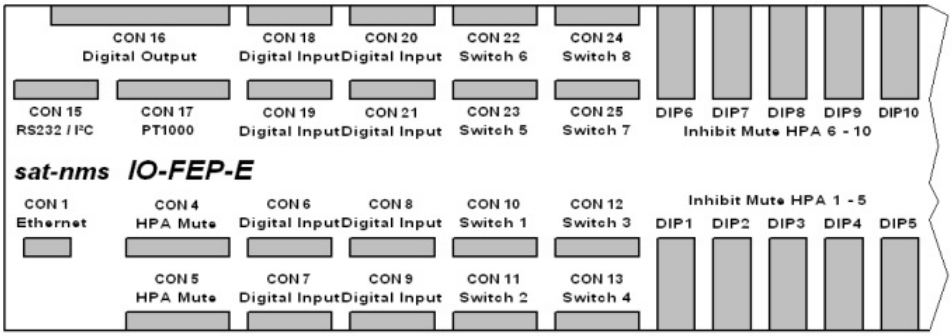

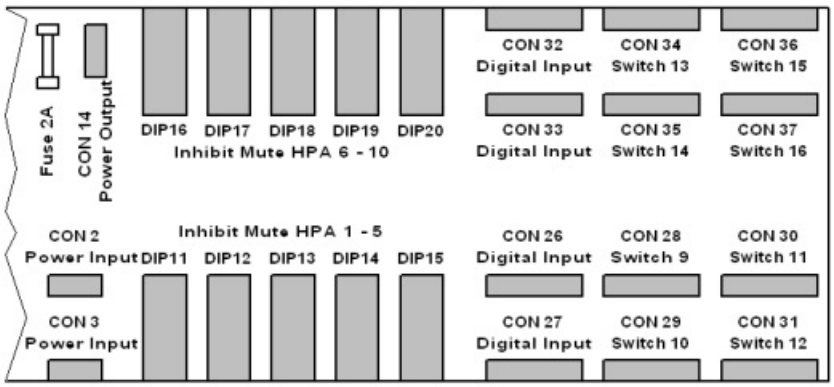

- **CON1** is the Ethernet 100Base-T / RJ45 connector. Use a standard network cable to connect the IO-FEP to an Ethernet hub. If you want to connect your computer and the IO-FEP directly without using a hub, you need a crossover cable for this with swapped RX/TX lines.

- **CON2** is to supply the ***sat-nms*** IO-FEP with power. You need two power packs, one for the +24VDC and another for the 24V_EXT circuit.
- **CON3** is to realize a redundant power supply system. When you connect two other power packs on this connector the ***sat-nms*** IO-FEP switches automatically to the other supply in case of current loss.
- **CON4 and CON5** are the digital outputs via photomos-relays. The standard configuration is, that the outputs are connected to the inhibit matrix to mute the connected HPAs in the moment of switching a waveguide switch. You can use them also as normal digital outputs. Therefore you have to change the Position of JP1...12. How to do this is described in chapter 2.4 configuring the ***sat-nms*** IO-FEP

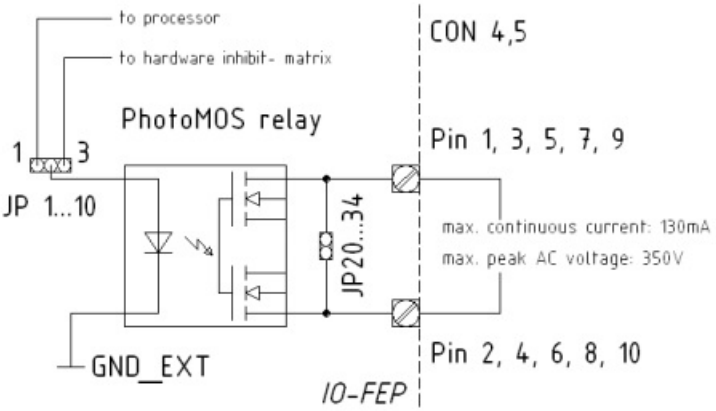

- **CON6, CON7, CON8 and CON9** are the connectors for digital inputs 1...16. They are only able to detect potential-free contacts. Never put Voltage to this pins, the ***sat-nms*** IO-FEP might be damaged in this case.

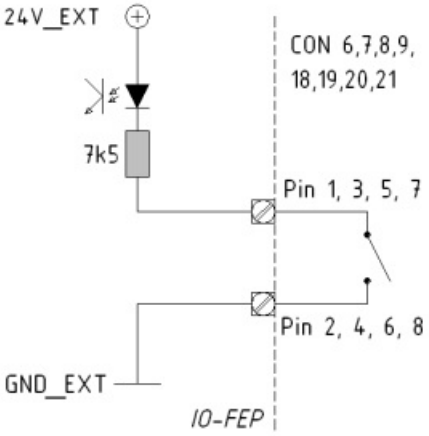

- **CON10, CON11, CON12 an CON13** connect the waveguide- or coaxial-switches #1...4 that you want to control here. The pin allocation is the same on all these connectors.

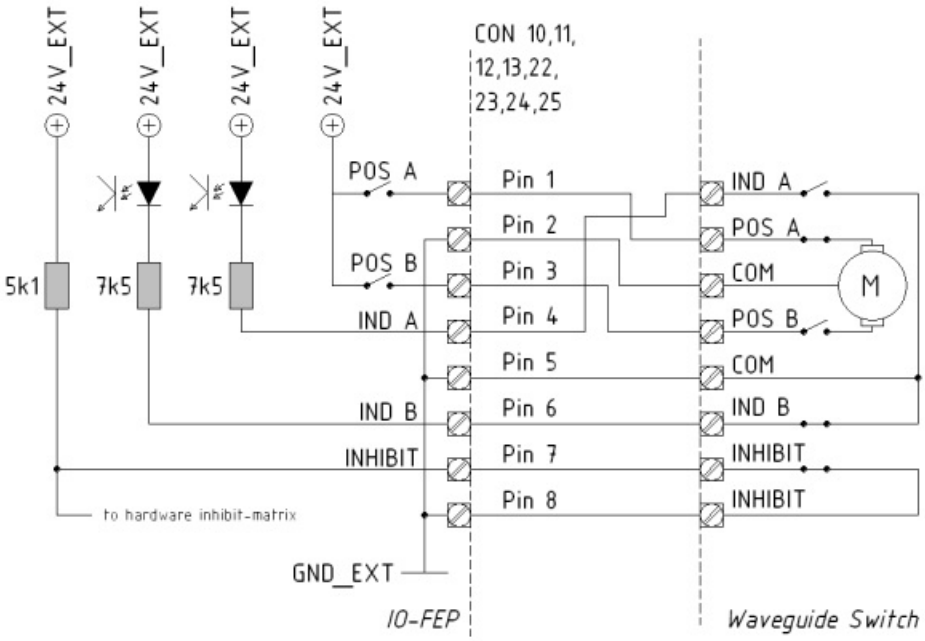

- **CON14** is the spare power output. If you want to use the 24V_EXT for other units, you can take the power from here. The maximum continuous current that can be taken from here is 500mA. Never exceed this limit, the IO-FEP might be damaged.
- **CON15** is the RS232 and the I2C-bus interface. If you need an adapter cable to connect the ***sat-nms*** IO-FEP via RS232 interface to your computer, call the support center of SatService GmbH. The I²C-bus interface can only be used with a customized software for the ***sat-nms*** IO-FEP and is for special requirements.
- **CON16** is the connector for the digital outputs switched by relays. COM1 is switched by three relays to OUT11...13. OUT14, OUT15 and OUT16 are the switched signals of COM4, COM5 and COM6. The external voltage that has to be switched by the relays may not exceed 24V. The maximum continuous current that can be switched is 1A.

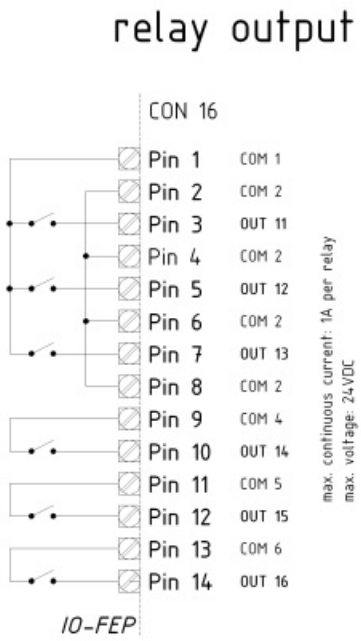

- **CON17** the external sensors to measure up to 4 temperatures have to be connected here. You can use any standard PT1000 type.
- **CON18, CON19, CON20 and CON21** are the connectors for digital inputs 17...32. They are only able to detect potential-free contacts. Never put Voltage to this pins, the ***sat-nms*** IO-FEP might be damaged in this case.
- **CON22, CON23, CON24 and CON25** connect the waveguide- or coaxial-switches #5...8 that you want to control here. The pin allocation is the same on all these connectors.

the following connectors are only to find on the extended version IO-FEP-E:

- **CON26, CON27** are the connectors for digital inputs 33...40. They are only able to detect potential-free contacts. Never put Voltage to this pins, the ***sat-nms*** IO-FEP might be damaged in this case.
- **CON28, CON29, CON30 an CON31** connect the waveguide- or coaxial-switches #9...12 that you want to control here. The pin allocation is the same on all these connectors.
- **CON32, CON33** are the connectors for digital inputs 41...48. In the delivery configuration they are only able to detect potential-free contacts. Never put Voltage to this pins, the ***sat-nms*** IO-FEP might be damaged in this case. If you want to detect a 24V-Signal, have a look at chapter 2.4 configuring the ***sat-nms*** IO-FEP to learn how to configure the digital inputs to be ablte to detect a 24V-Signal.
- **CON34, CON35, CON36 and CON37** connect the waveguide- or coaxial-switches #13...16 that you want to control here. The pin allocation is the same on all these connectors.

Power supply

The ***sat-nms*** IO-FEP is prepared to use two different 24VDC power supplies: 24VDC is for the controller and processor circuit. 24V_EXT is used to supply the digital outputs and the waveguide or coaxial switches. The IO-FEP is prepared for redundant power supply. So it is possible to supply the IO-FEP with one, two or four power supplies. We strongly recommend to use minimum 2 power supplies to to ensure the maximal system stability of the IO-FEP The following pictures show you how to connect the power supplies to the IO-FEP

- **using only one power supply** in this case 24VDC and 24V_EXT have to be connected to one power supply as you can see in the following picture

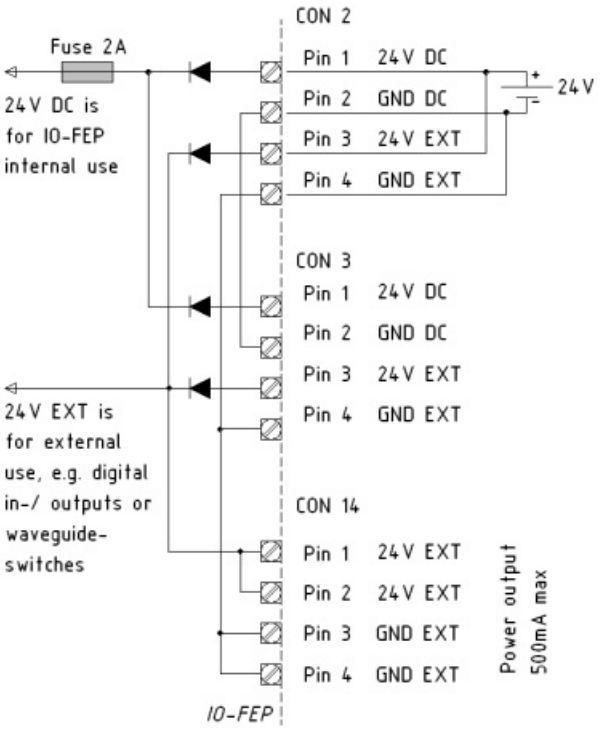

- **using two power supplies** here one power supply is connected to the 24VDC input and the other one to the 24V_EXT input.

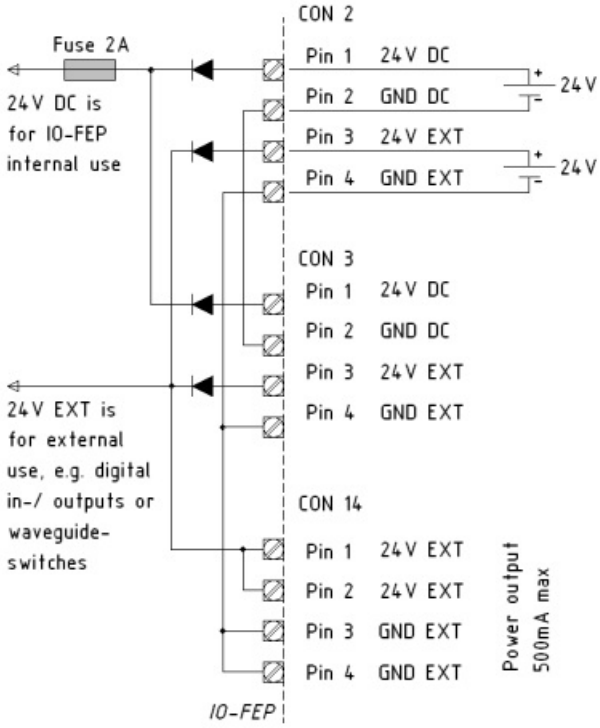

- **using four power supplies** if you like to have a redundant power supply for the IO-FEP you have to use 4 different power supplies. Connect them to the IO-FEP as you can see in the following picture. In case of failure of one power supply the IO-FEP is switching automatically to the other one and will be still running

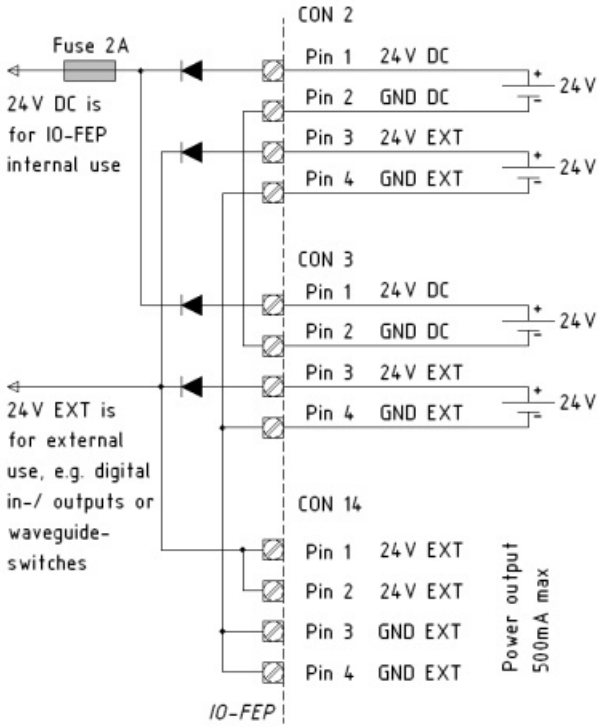

The power supply for the +24VDC circuit has to have a minimum current load of 150mA (IO-FEP-E: 200mA). The supply for the 24V_EXT has to have a minimum current load of 500mA (IO-FEP-E: 650mA) plus the current that will be taken from CON14 and the peak current of the biggest waveguide or coaxial switch to be controlled. Do not exceed the current-limit, in the circuit of 24V_EXT is no fuse implemented! The maximum peak-current for switching waveguide-switches is 5A.

The fuse for +24VDC circuit is directly beneath the RJ45 connector CON1. In case of damage only put in there 2A types. Otherwise the ***sat-nms*** IO-FEP might be damaged.

2.4 Configuring the *SAT-NMS* IO-FEP

This chapter gives a short overview about some configuration parameters you want to set after you have installed the ***sat-nms*** IO-FEP. A complete reference of all available setup parameters is given in chapter 3.4 Installation Parameters .

setting the HPA-mute-matrix

When the connected waveguide switches are equipped with inhibit contacts, it is possible to mute different connected HPA`s while the waveguide-switch is switching. Every of the 10 DIP-switches DIP1...10 represents one HPA #1...10. The numbers written on every DIP-switch belong to the numbers of the waveguide switches. When the switch is in position "on" the HPA mutes, when this waveguide switch switches.

An example: You want to mute HPA #1 when waveguide switch #2 or #4 or #8 changes its condition. Then you have to configure on the DIP-switch DIP1 the switches #2 and #4 and #8 into the "on"-position. All the others have to be in the "off"-position.

The extended version IO-FEP-E has additional DIP-switches DIP11...20. With these switches you select which HPA should mute, when one or more of the waveguide-switches #9...13 is switching.

DIP11 represents HPA1, DIP12 HPA2 an so on.

An example: You want to mute HPA #1 when waveguide switch #2 or #9 or #16 changes its condition. Then you have to configure on the DIP-switch DIP1 the switch #2 and on DIP-switch DIP11 the switch #9 and #16 into the "on"-position. All the others have to be in the "off"-position.

If the connected waveguide-switch is not equipped with inhibit-contacts, the ***sat-nms*** IO-FEP nevertheless gives you the possibility to mute the HPA in the switching moment by software. Therefore you have to open the enclosure of the ***sat-nms*** IO-FEP and put the Jumper with the number of the HPA in the upper position (pin 1-2) afterwards you have to configure the software-muting-matrix. How to do this is described in chapter 3.4 Installation Parameters . The following picture shows, where you can find JP1...10, the jumpers that define if the inhibit-signal comes from the waveguide-switches or is generated by the processor from the ***sat-nms*** IO-FEP.

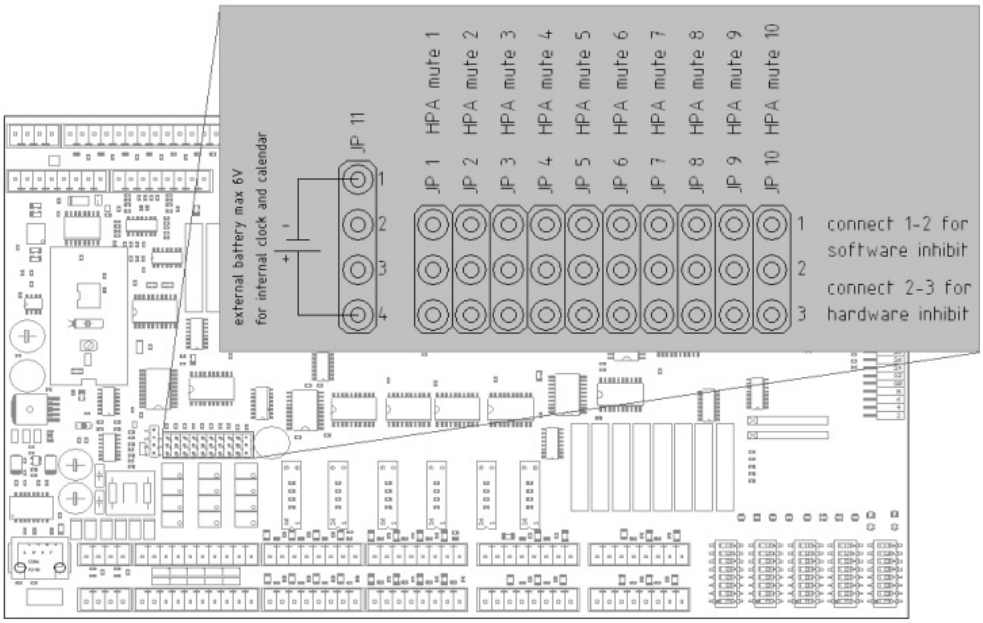

For bypassing the inhibit-switching, you find 2 sockets between CON4 and CON5. Use the "jumper extension" that is shipped with the ***sat-nms*** IO-FEP and normal jumpers to bypass the inhibit-outputs. JP20...24 bypasses the inhibit-signal for HPA #1...5, JP30...34 bypasses the inhibit-signal for HPA#6...10. The following picture shows you where to find the sockets.

A T T E N T I O N ! when you bypass the inhibit-outputs, the connected HPA(s) will not mute in case of switching a waveguide-switch! The HPA and the waveguide switch as well might be damaged in this case! Ensure that no waveguide-switch is switched when the inhibit signal is bypassed!

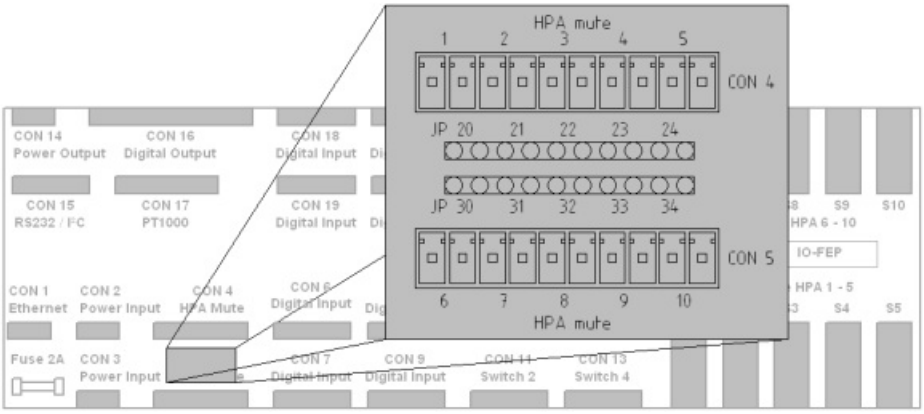

photomos-relay digital outputs

If you don't have some HPA's to mute or don't need all the mute-outputs, you can use them also as digital outputs. Therefore you have to open the enclosure of the ***sat-nms*** IO-FEP and put all the jumpers of the outputs, that you want to use this way, in the upper position (pin 1-2). In the second last picture you can see where to find this Jumpers on the PCB of the ***sat-nms*** IO-FEP. Dont´t exceed the continuous current limit of 130mA and the continuous voltage of 48V DC. Otherwise the ***sat-nms*** IO-FEP might be damaged. If you want to switch inductive loads, don`t forget to add a clamp diode to limit the spike voltages in the switching moment.

digital inputs DIN41...48 on the IO-FEP-E

On the extended version IO-FEP-E you can select, if you like to detect potential- free on/off-contacts or if you want to detect a 24V DC Voltage. The factory setting is to detect potential-free contacts, like all the other digital-inputs. If you want to detect 24V DC voltages, you have to do the following procedure: Open the IO-FEP-E's enclosure. Top right you find two opto-coupler with black enclosures (all the others are white). Below these optocouplers you can see two solder-jumpers, as you can see on the following picture. The left one is for DIN41...44, the right one for DIN45...48. Now open the connection of the solder-jumper that belongs to the DIN that you want to change. After that close the connection between the middle and the right-pad (P.F.). The following picture shows you where to find the solder jumpers on the PCB.

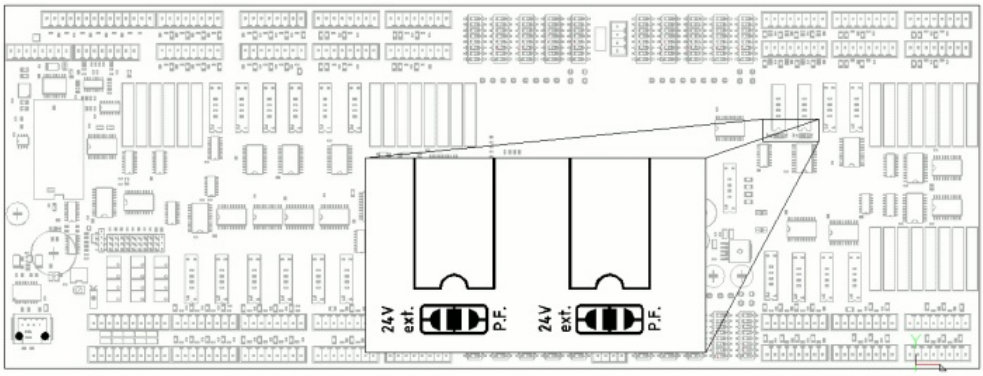

The following picture shows how to connect the digital inputs #41...48 in both ways of configuration, and how it works internally.

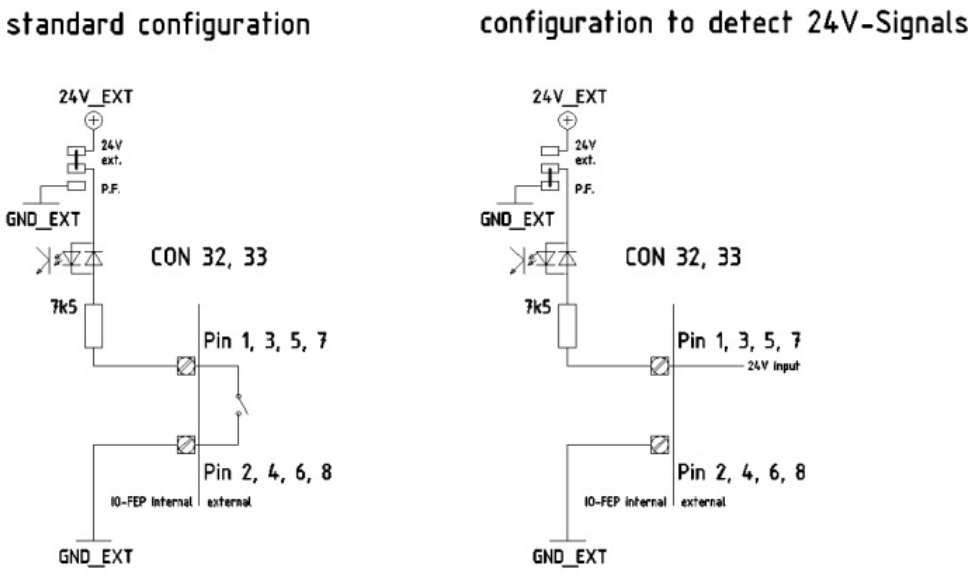

2.5 Mechanical installation

The ***sat-nms*** IO-FEP enclosure is DIN rail mountable. Hence simply snap the ***sat-nms*** IO-FEP on to the rail to fix it. For plain wall mount, fix a minimum 100 mm piece of DIN rail at the wall with at least two screws and lock the ***sat-nms*** IO-FEP on this. For 19inch rack-mount, SatService GmbH offers a mounting plate. Call our distribution centre for more informations.

When planning the mechanical installation of the ***sat-nms*** IO-FEP, please consider that cables to the ***sat-nms*** IO-FEP have to be fixed on the upper and the under side. So you need some space and something to fix the cables.

3 Operation

The ***sat-nms*** IO-FEP is designed to be controlled over a network link using a standard web browser. This means in practice, that the user interface to the IO-FEP appears in your browser window after you type in the IO-FEP's IP address in the address field of the browser program.

Operating the IO-FEP is mostly self-explanatory.

3.1 The Web-based User Interface

After having connected the IO-FEP to a power supply and set the IO-FEPs IP address, you can access the IO-FEP's user interface. To do this, start your favorite web browser program (Internet Explorer, Netscape Navigator, Opera or what else Program you prefer). At the address field, where you normally enter the URL of a web page you want to see, type in the IP address of the ***sat-nms*** IO-FEP you want to control.

The IO-FEP shows a web page consisting of a navigation bar at the left side of the browser window and the actual state display of the IO-FEP in the main part of the window. The readings automatically refresh once a second.

The navigation bar at the left contains a couple buttons which build the IO-FEP's main menu:

- State --- This button switches back to the IO-FEPs main page you already see when you

connect to the IO-FEP. This page displays the actual state of the IO-FEP.

- Settings --- By clicking to this button you switch to the 'Settings' page where you can change the position of the wageguide switches connected to the IO-FEP as well as the state of the outputs which are available for general purpose.
- Setup --- Clicking this button expands the navigation bar, making the submenu buttons visible which give acces to the several sections of the installation / setup dialog. A second click to the 'Setup' button folds the navigation bar to it's original state.
- Event Log --- This button shows the IO-FEP's event log in the main display area (the most recent 25 entries). The IO-FEP records all input port changes and all switch actuations with a time stamp.
- Info --- After a mouse click to this button, the IO-FEP shows a table with information like the serial number of the device or the revision ID and compilation date of the software.
- Help --- Clicking to this button shows the on-line version of this user manual

3.2 Displayed State

The 'State' page is the main page of the IO-FEP which shows the actual state of all inputs and outputs. The page automatically refreshes every second (the refresh interval is configurable at the Setup / General page).

The page shows a 5-column table containing all information about the input / output states, temperature readings and faults. The page is read-only, to change an output or waveguide switch position go to the Settings page.

Output Circuits

The output circuits column shows the current state of all outputs which are configured to work as operator controlled outputs. The outputs 1 to 10 are the photo-MOS output circuits which also may be used as HPA inhibit outputs. The lines 11 to 16 refer to the relay output circuits provided by the IO-FEP. The following applies to all output states:

- The displayed state ON/OFF is the *logical* state of the output. By default ON stands for a closed contact, however, each individual output may be configured to the invers function at the Setup / Output Circuits page.
- Outputs configured as 'UNUSED' neither show a circuit name nor an ON/OFF state.
- Outputs configured to act as an HPA inhibit circuits are displayed with a dimmed name, without a circuit state.

WG Switches

The second column displays the state of the waveguide switches controlled by the IO-FEP. The standard version provides I/O circuits for 8 switches, the IO-FEP-E for 16 switches.

Each switch may show one of the states 'A', 'B' or 'FLT'. The states are determined from the switches' positition indication circuits, 'FLT' is shown if both circuits have the same state (unknown position). Table row referring to switches configured as 'UNUSED' are left empty

Input Circuits

The table columns 3..5 show the state of the input circuits provided by the IO-FEP. The inputs 33 to 48 shown in the last column are only available with the IO-FEP-E.

- Inputs configured as 'INPUT' show the states ON or OFF.
- Inputs configured as 'ALARM' show the states OK or FLT.

- Rows referring to 'UNUSED' inputs are left empty.
- The displayed state is the *logical* state of each input. By default ON/FLT stands for a closed contact, however, each individual input may be configured to the invers function at the Setup / Input Circuits page.
- The displayed state also takes into account the delay time configured for each individual input. (This probably will not be visible for short delay times)

Temperature Readings

The IO-FEP displays the internal temperature and the reading of up to four external temperature sensors at the table field below the output circuits. For each sensor the sensor name, the temperature and an OK/FLT state is shown. A temperature value is considered 'OK' if the value is inside the limits configured at the Temperature Sensors page.

Protection Switch State

The IO-FEP up to 8 (the IO-FEP-E up to 16) instances of automatic 1:1 protection / redundancy switching units. Each protection switch controls the waveguide switch with the same number. Up to 5 alarm inputs may be assigned to each side of a protection switch at the Setup / Protection page. Two consecutive protection switches can be coupled to build a 2:1 redundancy circuit.

The following state information is provided for each protection switch unit (unconfigured protection switches are shown as empty fields, DISABLED instances show the text **DISABLED**):

- The operation mode 1:1-SW-ONCE/1:1-SW-ALWAYS/2:1-SW-ONCE (see Protection for details)
- The chain A fault state (green for OK, red for FAULT)
- The switch Position A/B
- The chain B fault state (green for OK, red for FAULT)
- The SWITCHED flag. This flag is set once the protection switch has actuated the WG switch due to a fault in the active chain. In 1:1-SW-ONCE mode this prevents the protection switch from further switching.
- 2:1 protection switches show the use of the redundant chain (CHAIN-1, CHAIN-2 or NONE) in place of the switch setting. The fault state of the the redundant chain is shown below this.

Unavailable instances of protection switches are shown shaded with dark background.

3.3 Output Circuit / WG Switch Operation

The page 'Settings' provides a 2-column table which is used to operate output circuits of the IO-FEP and the waveguide switch connected to it. Like the State page, the table shows the actual position of the outputs / switches. The display isn't updated automatically, so the displayed state may be outdated if the page is left open.

Clicking to the state of an output / waveguide switch opens a dialog which provides buttons to change the switch position. This dialog is password protected, you are required to login in order to change the position of waveguide switches or output circuits.

Protection switch parameters are shown in the third table column. Each protection switch may be set to ENABLED or DISABLED. ENABLED means that protection switch is 'hot', it will switch if a fault happens in the actually selected signal chain. The protection switch may be temporarely DISABLED, e.g. to perform maintenance tasks at the equipment without triggering the protection switch. For 2:1 protection switches the enabled state is coupled for both chains.

The function RESET resets the SWITCHED flag of the protection switch (only available if the SWITCHED flag of the particular protection switch is set).

2:1 protection switches show their loaction setting at the rightmost column. Clicking this lets you set the redundant chain use explicitely to NONE, CHAIN-1 or CHAIN-2. Note, that while enabled, the 2:1 protection switch does not allow to activate a chain if there is an error pending on it.

Please note: The 'Settings' page isn't updated automatically, so the displayed state may be outdated if the page is left open. Don't use your browser's 'reload' button to update the page as this will re-execute your last command with some bowsers. Instead, use the 'REFRESH PAGE' link below the table.

3.4 Installation Parameters

The pages accessible through the 'Setup' menu items contain the IO-FEP's installation parameters. Installation parameters are protected by an administrator password, without a successsful login ad administrator you may view the configuration settings but you may not change them.

Due to the large number of configuration settings, they are divided into several pages:

- General Setup --- Contains general configuration parameters like communication interface settings, passwords etc.
- Output Circuits --- The usage of the output circuits of the IO-FEP gets configured on this page
- WG Switches --- The control of the waveguide switches connected to the IO-FEP gets configured on this page.
- Input Circuits --- The usage of the input circuits is configured at this page
- Temperature Sensors --- The temperature sensors connected to the IO-FEP are configured in this page.
- Protection --- Protection switch configuration

3.5 General Setup

The general setup page provides some general installation settings (section 'General') and the settings of the IO-FEP's SNMP agent (section 'SNMP Configuration'). The settings are in particular:

General

- Display Title --- The title entered here is displayed on all pages of the IO-FEP user interface. For compatibility with older software versions, "State" is treated as an empty title. To remove an entered title, either enter "State" or a single space character.
- Date & Time --- Click to 'Set Time' in order to set the actual date / time at theIO-FEP's real time clock. Enter the actual date / time in *exactly* the format *YYYY-MM-DD HH:MM:SS* .
- NTP Time Server 1 IP --- To make the IO-FEP sync it's internal clock to a NTP time server, set this to the IP address (aaa.bbb.ccc.ddd) of the NTP server. Setting this to 0.0.0.0 disables the NTP synchronisation (even if time server 2 IP is set).
- NTP Time Server 2 IP --- You may define a second (backup) time server IP address with this field. The backup time server is queries if the first servcer is not available. The setting 0.0.0.0 disables the backup time server interrogation.
- NTP Time Zone Offset --- NTP servers deliver their time stamps in UTC. By setting an offset

in this field, you can tweak the IO-FEP clock to display local time, even if synced to a NTP server. Entering "01:00" for example adjusts the clock to CET (Central European Time), "-04:30" to VET (Venezuelan Standard Time). Beside the the HH:MM notation, the software also accepts arbitrary values in minutes. The examples above then would read as "60" (CET) or "-270" (VET). Entering "0" or "00:00" clears the offset, returning the clock to UTC, the same happens if the offset cannot be parsed by the software.After changing the time zone, you should clear the event log because old log entries are not affected by the time zone change.

- State Page Refresh Rate --- The state page by default refreshes automatically every second. The refresh rate may be slowed down, setting it to zero disables the automatic refresh completely.
- Max. Concurrent WG-Switch Actuations --- The IO-FEP is capable to queue / delay waveguide switch actuations in order to protect weak power supplies from overload. While this is not important if the IO-FEP is exclusively controlled through the web interface, a monitoring & control computer is capable to command actuations for all waveguide switches at a time. Set the parameter to the max. available supply current divided by the current drawn by a single waveguide switch. Setting the parameter to zero disables the switch actuation queuing.
- Serial I/O Address --- The serial interface may be operated either with the MOD-95 / Miteq protocol, using a device address 'A' to 'G' or with a simple ASCII / terminal protocol (setting 'NONE'). See chapter 4.3 The RS232 remote control interface for details.
- User Password --- Defines the user password (default 'user'), which is required to actuate switches or to set output circuits of the IO-FEP. An empty password disables the password prompting.
- Administrator Password --- Defines the administrator password (default 'admin'), which is required to change any configuration settings. An empty password disables the password prompting.
- Reboot Device --- Clicking to REBOOT forces a power up reboot of the IO-FEP (after an inquiry dialog). You may use this to force the IO-FEP to re-read a SETUP.TXT file you uploaded via FTP. Please note, that rebooting the IO-FEP interrupts all operation including redundance switching for about 30 seconds.

SNMP Configuration

- Read Community --- Sets the SNMP community string expected for read access. The default is 'public'.
- Write Community --- Sets the SNMP community string expected for write access. The default is 'public'.
- Trap Community --- Sets the SNMP community string sent with traps. The default is 'public'.
- Trap Destination IP 1 --- Enter the trap destination IP address (dotted quad notation) to make the IO-FEP sending traps by UDP to this host. Setting the parameter to 0.0.0.0 disables the trap generation.
- Trap Destination IP 2 --- Enter the trap destination IP address (dotted quad notation) to make the IO-FEP sending traps by UDP to this host. Setting the parameter to 0.0.0.0 disables the trap generation.
- Trap Destination IP 3 --- Enter the trap destination IP address (dotted quad notation) to make the IO-FEP sending traps by UDP to this host. Setting the parameter to 0.0.0.0 disables the trap generation.
- Trap Destination IP 4 --- Enter the trap destination IP address (dotted quad notation) to make the IO-FEP sending traps by UDP to this host. Setting the parameter to 0.0.0.0 disables the trap generation.

- System Location --- The IO-FEP replies to MIB-II sysLocation requests with the text entered at this place.
- System Contact --- The IO-FEP replies to MIB-II sysContact requests with the text entered at this place.

Real Time Clock battery backup

The IO-FEP's real time clock is backed up by a goldcap capacitor. The goldcap supplies the RTC chip with power for several days if the main power is missing. This is the preferred mode of RTC backup for stationary installations of the IO-FEP.

For applications where the IO-FEP is powered up only occsionally, a lithuim cell may be connected inside the IO-FEP housing in order to provide a permanent buffering of the clock.

NTP time synchronisation

The IO-FEP may be configured to use one or two NTP time servers as reference for it's internal clock. To enable NTP time synchronisation, set the NTP server's IP address at the general setup page.

With NTP time synchronisation enabled, the IO-FEP sets the internal clock from the NTP time once after power on and then every 3 hours. This ensures correct time stamps for IO-FEP's event log.

With the first successful NTP sync after power on, the IO-FEP also sets the onboard RTC chip to the NTP time. If later on the NTP server becomes unavailable, the IO-FEP automatically uses the RTC chip as a backup for synchronisation. The actual state of time synchronisation is continuously displayed at the bottom of the main page of the IO-FEP's Web-GUI.

If the time server address 2 is configured as well, the IO-FEP queries this server if the first one is not available (times out). The date / time status line at the primary IO-FEP web page always states which time server was used for synchronization recently and if this was successful.

3.6 Output Circuits

This page configures the usage of the output circuits provided by the IO-FEP. Outputs 1 .. 10 refer to the photo-MOS outputs, normally dedicated to the WG switch - HPA muting circutry. Outputs 11 .. 16 are the general purpose relay outputs of the IO-FEP.

Following properties may be configured for each output:

- Type --- Defines the main purpose / type of the output:
    - UNUSED --- The output is not connected / not used
    - SW-INHIBIT --- The output is controlled by the software as a HPA mute output. It is not accessible for general purpose. (only available for the outputs 1..10)
    - HW-INHIBIT --- The output is controlled directly by the hardware HPA mute logic, not under software control. (only available for the outputs 1..10)
    - OUTPUT --- The output is configured as general purpose output, it's state may be controlled at the web interface or through one of the M&C interfaces.
    - TEMP-CTRL --- The output is configured as an output for a temperaure control loop. The "State" page shows the actual state of this output like for a normal output, but the output cannot be controlled manually. The temperature control loop setup only offers outputs which are configured as TEMP-CTRL.

- Name --- When you activate an output at the 'Type' setting, the IO-FEP names this output as 'Oxx'. You may name the output in a more meaningful way by entering a circuit name at this place.

- Polarity --- 'NORMAL' polarity closes the contact for the output setting 'ON', 'INVERTED' polarity reverses this behaviour. The INVERTED setting frequently is used together with the software controlled inhibit logic in order to *open* the inhibit circuit while the switch moves. The polarity setting is not available if a photo-MOS output is configrued as 'SW-INHIBIT'.

Please note, that the function of the outputs 1 ..10 first and foremost is controlled by the jumper settings (JP1 .. JP10) inside the IO-FEP. Outputs which are jumpered as hardware controlled HPA mute outputs (the factory setting for all of these outputs, jumper position 2-3) are not under software control and *must* be configured either as UNUSED or as HW-INHIBIT.

3.7 WG Switches

This page configures the waveguide switches controlled by the IO-FEP. The standard IO-FEP offers I/O circuits for up to 8 waveguide switches, with the IO-FEP-E up to 16 switches may be controlled.

The following properties may be configured for each waveguide switch:

- Type --- Defines actuation mode for the switch:
    - UNUSED --- The switch is not connected / not used. te .ns FIXED-PULSEThe switch is actuated with a pule of a fixed width. After the actuation pulse the position is checked and a fault is raised if the switch position is not signalled as expected.
    - AUTO-PULSE --- With AUTO-PULSE the IO-FEP releases the switch acutation as soon as the switch signals that it reached it's target position. The pulse width given for this switch in this mode acts as a maximum time / timeout: if the switch does not reach it's target position within this time, a fault is raised.
    - READ-ONLY --- The IO-FEP does not produce any actuation for a READ-ONLY switch, it simply displays name and position of this switch at the status page.
    - SLAVE-TO-SWITCH-n --- Slave switches are automatically actuated when the configured master switch is set. Internally the switch uses it's individual actuation pulse timing, raises faults if the position indication inputs read unexpected states.
- Name --- When you activate switch at the 'Type' setting, the IO-FEP names this switch as 'Sxx'. You may name the switch in a more meaningful way by entering a circuit name at this place.

- Pulse Width --- The actuation pulse width (FIXED-PULSE) or the switch actuation timeout (AUTO-PULSE) in milliseconds.

- Inhibit --- Set a check mark at a particular column to activate the software controlled HPA muting for this switch and the selected output. Multiple HPA muting outputs may be selected to be activiated from a single switch. An output must be configured to 'SW-INHIBIT' mode before it can be selected at this place.

FIXED vs. AUTO pulse width

You will find the AUTO-PULSE mode very handy in most cases: The actuation pulse width is as short as possible, making 'queued' switching sequences running much faster. The AUTO-PULSE however requires that the switch signals it's target position not before the switch mechanics has reached a stable position where it does not 'snap back' if the actuation is switched off.

You should therefore test each switch in AUTO-PULSE mode carefully if it operates reliably when controlled by the IO-FEP before you apply RF power to it.

READ-ONLY switches

The READ-ONLY mode is meant to be used for switches which have their actuation circuits wired in parallel to another switch, or do not provide any electrical actuation at all. The IO-FEP simply reads and displays the position decoded from the position indication inputs. However, the IO-FEP does no position fault checking with switches marked as READ-ONLY. This is because it neither knows the nominal position of such a switch nor when it gets switched and therefore may cause an 'indifferent position' state for a short moment.

SLAVE switches

SLAVE switches change their position any time the configured master switch is set. This is done by copying the switch position request from the master switch to all its slaves. Internally the slave switches are treated as individual switches, each switch controls its activation pulse timing and checks its position indicating inputs individually. Each slave uses its individual pulse width setting, it however inherits the AUTO/FIXED pulse mode from it's master.

As slave switches are commanded simuntaneously with their master, but processed individually, they are subject to the IO-FEP's switch action queing. For details see the correspondent paragraph below.

Software controlled HPA muting

The IO-FEP provides software controlled HPA muting during switch actuations for situations where the waveguide switches do not provide inhibit circuits or where such circuits are not usable for some reason. To use this feature, you have to configure the IO-FEP as follows:

1. Select a number of PhotoMOS outputs tob e used as software controlled HPA muting circuits. Open the IO-FEP and set the jumpers for these outputs to position 1-2
2. At the Setup / Output Circuits configure these outputs as 'SW-INIHIBIT'. To make the output *open* to mute the HPA, set output polarity to 'INVERTED'.
3. At the Setup / WG Switches page configure the waveguide switches to activate the mute outputs in accordance to the RF signal flow.

The IO-FEP mutes the HPA(s) before the switch motor is actuated and unmutes it after the switch has reached it's target position. Multiple waveguide switches may activate the same muting output, the IO-FEP combines such requests with a logical 'or'. Each waveguide switch may activate multiple muting outputs.

When using the software controlled HPA muting, you should consider the following:

- Although the IO-FEP continously monitors the position indication circuits of the switches and by this means recognizes manual switch actuations, you never should move such a switch manually. It may take up to 20 msecs until the IO-FEP mutes the HPA, with high RF power applied this may be enough to damage HPA and / or the switch.
- It is not possible to mix hardware and software controlled HPA muting internally in the IO-FEP. If your system setup requires such a mix, you have to configure the software controlled inhibits and the hardware controlled ones separately, to different output circuits. You may combine these externally, e.g. by wiring the circuits in series.

Switch actuation queuing

The IO-FEP is capable to queue / delay waveguide switch actuations in order to protect weak power supplies from overload. This in particular is valuable if the IO-FEP is operated by monitoring & control computer, as a M&C is capable to command actuations for all waveguide switches at a time. The IO-FEP takes care that no more switch actuation outputs than configured are active at a time. Commanded switch actuation are delayed for this, switches commanded in parallel are processed in the order of their switch number.

The maximum number of the parallel switch acutation is configured at the General Setup page.

3.8 Input Circuits

This page configures the usage of the input circuits procided by the IO-FEP. The IO-FEP monitors 32 general purpose inputs (48 on the IO-FEP-E). Each input may be configured as a simple state monitor, signalling it's state as ON/OFF, or as alarm input signalling it'state as OK/FLT.

The following properties may be set for each individual input:

- Type --- Defines the main purpose / type of the input:
  - UNUSED --- The input is not connected / not used. te .ns INPUTThe input is used for general purpose state monitoring. It reports it's state as ON/ OFF.
  - ALARM --- The input is used for alarm monitoring. It reports it's state as OF / FLT.
- Name --- When you activate an input at the 'Type' setting, the IO-FEP names this input as 'Ixx'. You may name the input in a more meaningful way by entering a circuit name at this place.
- Polarity --- 'NORMAL' polarity signals 'ON' or 'FLT' for a closed contact, 'INVERTED' polarity reverses this behaviour.
- Delay --- If this parameter is set to a non-zero value, the IO-FEP requires the input signal to be stable for at least the given time before a new state is signalled. You may use the delay to prevent short fault 'spikes' from being signalled.

3.9 Temperature Sensors

This page configures the temperature sensors. The IO-FEP contains an internal temperature sensor measuring the temperature on the circuit board. Additionally the IO-FEP offers inputs for up to four external (Pt-1000) temperature sensors which may be used to monitor the temperature of the equipment shelter, the antenna feed box or other locations. The IO-FEP's temperature measurement-circuit is calibrated before delivery, That's the reason why the offset sometimes is not set to 0,0°C in delivery state.

The following properties may be configured for each temperature sensor.

- Enable --- Setting this parameter to 'ENABLED' activates the monitoring for this sensor.
- Name --- You may enter a descriptive name for the temperature value measured with this sensor. The name appears at the main ('State') page.
- Offset --- Pt-1000 temperature sensors are very precise and do not require an individual calibration for simple monitoring applications. Nevertheless, a temperature offset may be defined for each sensor, e.g. to compensate for the cable resistance to the sensor. The

displayed value is the sensor readling + the offset defined in this column.

- Low/High Limit --- You may define temperature limits for each sensor. The IO-FEP signals a fault if a temperature is outside the given limits. To disable the limit checking, set the limits to values like -100 / +300.

- Closed Loop --- Configures the IO-FEP to do a closed loop teperature control with this sensor. This feature may be activated for the external sensors 2-5 and only if a sensor is activated. The following options may be set:

  - NONE: No temperature control is done
  - HEAT: The IO-FEP switches the configured output ON if the temperature drops below *T_target - T_hyst/2* , it switches the output OFF if the temperature raises above *T_target + T_hyst/2*
  - COOL: The IO-FEP switches the configured output ON if the temperature raises above *T_target + T_hyst/2* , it switches the output ON if the temperature drops below *T_target - T_hyst/2*
- Target Temp --- The target teperature for the closed loop temperature control.

- Hysteresis --- The control loop hysteresis

- Control Output --- The output port used for the temperature control. Only outputs configured as TEMP-CTRL outputs may be used, you must configure the output before you can reference it in the temperature control.

- Inhibit Input --- You may define an inhibit input which disables the control loop (forces the output to OFF) if active. All NORMAL or ALARM inputs may be used as inhibit input. Select 'none' if there shall be no input defined to inhibit the control loop.

The internal temperature sensor of the IO-FEP cannot be disabled, it's name is fixed to 'Board' and it's offset is fixed to '0.0'.

3.10 Protection

The IO-FEP provides up to 8 (the IO-FEP-E up to 16) instances of automatic 1:1 protection / redundancy switching units. Each protection switch controls the waveguide switch with the same number. With this page the operation mode of each protection switch and it's alarm input assignment is configured.

Operation Mode

Each protection switch may be configured to one of the following operation modes:

- UNUSED --- The protection switch is not configured
- 1:1-SW-ONCE --- The protection switch is configured for SW-ONCE mode
- 1:1-SW-ALWAYS --- The protection switch is configrued for SW-ALWAYS mode
- 2:1-SW-ONCE --- The protection switch (and it's neighbour) are coupled and used to build a 2:1 chain redundancy circuit.

To configure a protection switch it's required, first to configure the waveguide switch controlled by this protection switch instance at the Setup / WG Switches page. Protection switches belonging to "UNUSED" waveguide switches are marked with "n/a" and cannot be configured.

Input Assignment

For each protection switch configured as 1:1-SW-ONCE/1:1-SW-ALWAYS up to 5 alarm inputs for chain A and up to five alarm inputs for chain B may be assigned. It is not required to configure all 5 fault inputs for a chain, unused inputs are marked with "none". Obviously, at least one alarm input for each chain mut be configured to make the 1:1 protection work.

Chain A is defined as the equipment chain which is selected while the waveguide switch is in position A, chain A faults are fault signals originated by equipment in chain A, hence causing the protection switch to switch over to position B. How fault inputs are assigned for 2:1 protection switches, see below.

Only inputs configured as ALARM inputs may be selected as a fault input signal for a protection switch. Hence, the inputs must be configured at the Setup / Input Circuits page before they can be used in a protection switch.

1:1-SW-ONCE vs. 1:1-SW-ALWAYS Operation

A protection switch toggles it's position if there is no fault at the actually redundant chain and there is at least one fault at the actually selected chain. Thereby the software honors any signal inversion or delay configured for each individual input. Switching to the redundant chain causes the protection switch to set the SWITCHED flag as an indication that a switchover took place. In 1:1-SW-ONCE mode, this prevents the protection switch from switching back to the original position until the SWITCHED flag has been reset by the operator. In 1:1-SW-ALWAYS mode the protection may switch back if the switching condition appears laterally reversed.

2:1-SW-ONCE 2:1 Chain Operation

This mode lets you couple two consecutive protection switch units to build one 2:1 chain redundancy switch. If you select this mode, the following assignments / prerequesites apply:

1. Each switch controls one operational chain with switch position A meaning "the chain is in use". Position B switches the redundant chain in place. This means switch postions A/A describe the normal operation mode, A/B or B/A appear if the redundant chain has been switched in place of one of the operational chains. The switch combination B/B usually makes no sense.
2. The chain A fault inputs of each switch are to receive faults from the correcponding operational chain. All chain B fault inputs are combined (logical OR), receiving faults from the redundant chain.
3. An 2:1 redundancy unit switches the redundant chain in place of an operational chain if it is enabled, if there is no fault pending for the redundant chain. A 2:1 redundancy is only active in "NONE" position, therefore acts in a "switch once" manner.

3.11 Event Log

The IO-FEP provides an internal event log which records all changes at input circuits, waveguide switch or output circuit actuations and temperature limit alarms. Each event is stored with a time stamp read from the IO-FEP's real time clock. The event log is limited to a size of 500 event, the log works as a circular buffer, recent entries automatically overwrite the oldest ones. The event log resides in the IO-FEP's volatile memory, the log always starts empty when the IO-FEP is powered on.

The event log page shows up 25 entries from the event log in a table. Initially the 25 recent entries of the log are shown. Five buttons above the event log table control the display of the log:

- CLEAR --- Clears the event log.
- --- Jumps to the oldest entries in the log
- --- Goes one page back to older entries
- --- Goes one page forward, to more recent entries
- --- Jumps to the mots recent entries in the log.

The display of the event log does not automatically update if new events are added, use the browser's reload button or to see if new events have been added.

4 Remote Control

The ***sat-nms*** IO-FEP may be controlled remotely by a monitoring and control application either through the TCP/IP interface or through a serial RS232 interface. Both communication methods use the same commands and parameters, however, there are different frames around each message depending communication method used.

Controlling the device from the web interface, the TCP/IP remote control interface or via the serial interface is completely equal, commands may sent to any interface at any time, the IO-FEP will use the parameter it receives last.

4.1 General command syntax

The IO-FEP knows a number of parameters, each identified by a parameter name. To set a certain parameter to a new value, a message:

name=value

has to be sent to the IO-FEP. The IO-FEP interprets this command, checks the range of *value* , sets the internal parameter and then answers:

name=value

The *value* in the reply is the value actually recognized by the IO-FEP. For instance, if the requested value was out of range, the replied (and internally used) value is limited to the applicable minimum or maximum.

To read a parameter from the IO-FEP, instead of a new parameter value a question mark is sent:

name=?

The IO-FEP replies the actual value in a complete message:

name=value

A complete list of the parameter the IO-FEP knows is shown later in this document in chapter Parameter list . Below, some common rules applying to the remote control message syntax are summarized.

- Parameter names always are of lower case letters, most of them are four characters long.
- Non-numeric parameter values always are written in upper case.
- Numeric (floating point) values may be specified with an arbitrary precision, however the device will reply only a fixed number of places. The IO-FEP recognizes a decimal point ('.'), numbers must not contain any commas.
- There must not be any whitespace in front or after the '=' in a message.

- If the command/query is not of the form **name=value** or **name=?** , the IO-FEP replies the message **?SYNTAX** .
- If the message syntax is OK, but contains an unknown parameter name is used, the reply is **?UNKNOWN**
- Numeric parameters are cut to the limits defined for this particular parameter.
- Misspelled choice values cause the IO-FEP to set the first value of the choice list.
- Assigning a value to a read-only parameter will cause no fault, however the IO-FEP will overwrite this parameter immediately or some seconds later with the actual value.

4.2 The TCP/IP remote control interface

Controlling the IO-FEP through the network is done by means of HTTP GET requests. Setting parameter values or querying readings or settings, all is done by requesting HTTP documents from the IO-FEP. The message *to* the IO-FEP thereby is coded into the URL as a CGI form parameter. The IO-FEP replies a one line document of the MIME type 'text/plain'.

The document name for remote control is **/rmt** , hence (assuming the IO-FEP is listening to the IP address 10.0.0.1), requesting a document with the URL

`http://10.0.0.1/rmt?tmp0=?`

will let the IO-FEP reply the actual level in a one line text document:

tmp0=36.3

This way all parameters may be queried or set, you may use your favorite web browser to try out the remote control of the IO-FEP manually.

4.3 The RS232 remote control interface

Beside the network interface, the IO-FEP also provides an RS232 serial port which can be used to control the device remotely. Depending on the device address set, the IO-FEP either runs framed protocol with start/stop characters and checksum or it provides a dumb terminal interface. The RS232 interface always operates at 9600 baud, no parity, 8 data bits, one stop bit.

If an address 'A' .. 'G' is selected, the IO-FEP expects each message it receives to be packed into a frame as described below.

char #	***example***	***description***
1	{	start character, always ' {'
2	A	device address (A..G)
3	t	first character of the message body
.	m	message body ...
.	p	..
.	0	..
.	=	..
n-1	?	last character of the message body

n .tc}	end character, always '} '	
n+1	.	checksum

The checksum byte is calculated using an algorithm as implemented by the following formula:

$$sum = 32 + \left(\sum_{i=1}^{n} (byte[i] - 32) \right) \text{ modulo } 95$$

This protocol type is known as *MOD95-* or *Miteq protocol* . The IO-FEP also packs it's reply in a protocol frame as described above. incomplete frames, checksum errors or address mismatches let the IO-FEP ignore the message. The time between the characters of a message must be less than 5 seconds or the IO-FEP will treat the message as incomplete.

If the IO-FEP is set to the device address 'NONE', it uses a simple line protocol instead of the framed protocol described above. Messages sent to the IO-FEP have to be terminated with a carriage return character (ASCII 13), the IO-FEP terminates replies with a CR/LF pair (ASCII 13/10). There is no echo for characters entered, hence this protocol easily may be used for computer based remote control.

4.4 SNMP Control

The IO-FEP contains an SNMP agent listening at UDP port 161. The SNMP agent provides a common subset pf the MIB-II system / interface parameters and gives full access to the remote control capabilities of the IO-FEP with a number of MIB objects placed in the private.enterprises tree.

The actual MIB file defining the IO-FEP's private MIB may be downloaded from the IO-FEP istelf by FTP (user 'service', password 'service'). The file 'IO.FEP.MIB' contains all neccessary information

4.5 Parameter list

The table below shows the complete list of M&C parameters the IO-FEP knows. For each parameter the valid range and a short description is given.

name		***description***
time	r/o	Delivers date / time, format YYY-MM-DD HH:MM:SS
stim	r/w	Sets date / time, format YYY-MM-DD HH:MM:SS
sver	r/o	Software version
srno	r/o	Device serial no
caps	r/o	Software capabilities, coded as bits in a decimal number:
		2^0 = IO-FEP-E version
		2^1 = protection / redundancy switching installed
		2^2 = power supply monitoring installed
		2^3 = NTP time synchronization installed

tmp0	r/o	Board temperature (°C)
tmp1	r/o	Temperature sensor 1 (°C)
tmp2	r/o	Temperature sensor 2 (°C)
tmp3	r/o	Temperature sensor 3 (°C)
tmp4	r/o	Temperature sensor 4 (°C)
outp	r/w	Digital outputs
wgsw	r/w	Waveguide switch actuation
prsw	r/w	Protection switch monitoring and control
stat	r/o	I/O state
psua	r/o	Power supply alarms (4 digits 0/1 for 24V, 24VEXT, 24V-RED and 24VEXT-RED) 0 states OK, 1 states fault
tsya	r/o	Time synchronisation alarm, 0 = NTP sync OK or disabled, 1 = NTP sync failed, 2 = NTP1 sync failed, but NTP2 sync was successful.
lsyn	r/o	delivers a text describing the date/time and source of the recent clock synchronisation

I/O state monitoring

The command 'stat=?' returns a 32 character string which contains the complete I/O state of the IO-FEP, coded in 5 hexadecimal numbers. Example:

```
000000000010 0400 00000006 00 00
           |   |          |  |  |
           |   |          |  |  no hi temperature faults
           |   |          |  no low temperature faults
           |   |          S01=B, S02=A
           |   Output 11 is ON
           Input 5 is on
```

- *Inputs* --- The first number (12 characters, 48 bits) reports the state of the IO-FEP input circuits. Each bit of the hexadecimal number corresponds to one input. The least significant bit corresponds to input 1. A bit set to '1' reports an 'ON' or 'FLT' input, inputs which are 'OK' or 'OFF' read '0'. The reported port states are logical states, they already include the polarity inversion and filtering delay as defined in the setup for each individual port. Unused ports always read '0'.
- *Outputs* --- The second number (4 characters, 16 bits) reports the actual state of the output ports in a similar way. The contents of this is exactly the same as the reply to 'outp=?': pit 0 corresponds to the state of PhotoMOS output 1, bit 15 to the state of the relay 6. A bit set to 1 tells that the output is 'ON' as displayed at the user interface. A software polling the 'stat=?' variable frequently may parse the output state from here rather from 'outp=?', thus saving some protocol overhead.
- *WG Switch Positions* --- The third number (8 characters, 32 bits) reports the actual wave guide switch position. Each switch encodes it's state in two bits of the number, WG switch 1 uses the least significant bits. The bits reflect the state of the position indication circuits of each switch: '01' tells that the switch is in position 'A', '10' signals position 'B'. The bit

combinations '00' and '11' both signal invalid states, a software monitoring the IO-FEP should decode this and report it to the operator. The switch positions reported here are pre-processed by the IO-FEP, not the raw position indication readings. If a switch is commanded to position 'X', this position is reported immediately, even if the switch did not yet reach this position. After the switch process has completed (or timed out) the real position is reported. This behaviour nis necessary to hide the delayed / queued switching performed by the IO-FEP from a M&C computer which expectes the IO-FEP to be a 'dumb PLC'. Unused waveguide switches always report '00'

- *Temperature Faults* --- The words 4 (low temperature faults) and 5 (high temperature faults) encode the limit faults for the temperature sensors of the IO-FEP. The least significant bit corresponds to the internal board temperature sensor, bit 1 to the external temperature sensor 1 and so on.

Waveguide switch actuation

The command 'wgsw=xxxxxxxx' actuates one or more waveguide switches. Switch positions are coded the same way as in the 'stat=?' reply described above: two bits for each switch, the least significant two bits for switch 1. A bit combination '01' commands position 'A', '10' commands position 'B'. The combinations '00' and '11' are ignored, the switch position remains unchanged. If multiple switch movements are commanded at the same time, the switches move contemporaneously unless the number of parallel switch actuations has been limited in the setup.

A computer controlling the IO-FEP may use the 'wgsw' command like it would control the actuation motors directly: switching on a motor and switching it off a few hundred milliseconds later. This is for compatibility with software that expects a dumb switching unit to control the waveguide switches. In fact there are no timing contstraints with the 'wgsw', the IO-FEP control the actuation timing off the switches internally.

Output control

The command 'outp=?' returns a 4 digit, 16 bit hexadecimal number showing the actual state of all outputs of the IO-FEP. Bit 0 corresponds to the state of PhotoMOS output 1, bit 15 to the state of the relay 6. A bit set to 1 tells that the output is 'ON' as displayed at the user interface.

Writing a 'outp=xxxx' sets all outputs of the IO-FEP. To set or clear a single output, you have to read the actual state, set/clear the appropriate bit and send the number back to the IO-FEP.

Outputs which are not configured as type 'OUTPUT' always read '0'. Setting these outputs has no effect, the IO-FEP silently ignores commands to outputs which are not configured to act as a general purpose output.

Protection switch control

The command 'prsw=?' returns a 32 digit hexadecimal string showing the state of up to 16 protection switch units in the IO-FEP. The bit positions 0..7 (the rightmost two digits) refer to protection switch #1, bits 8..15 to protection switch #2 and so on. The status bit definitions for one protection switch are as follows:

- 0 (lsb) --- 1 = WG-Switch fault or instance not configured
- 1 --- 0 = 1:1-SW-ONCE, 1 = 1:1-SW-ALWAYS
- 2 --- 0 = DISABLED, 1 = ENABLED
- 3 --- 0 = 1:1, 1 = 2:1 redundancy (bit 1 doesn't care in this case)
- 4 --- 1 = fault in chain A
- 5 --- 1 = fault in chain B

- 6 --- 1 = SWITCHED
- 7 (msb) --- 0 = chain A selected, 1 = chain B selected

The same parameter is used to send commands to a protection switch unit in the IO-FEP. The format is different to the status report described above. One command changes one parameter of a particular protection switch:

prsw= *xy* applies the command *x* (a one digit number 1..8) to the switch *y* (1..16). The command codes for *x* are defined as follows:

- 1 --- Set the protection switch to UNUSED
- 2 --- Set the protection switch to 1:1-SW-ONCE
- 3 --- Set the protection switch to 1:1-SW-ALWAYS
- 4 --- Set the protection switch to DISABLED
- 5 --- Set the protection switch to ENABLED
- 6 --- Set the protection switch to position A
- 7 --- Set the protection switch to position B
- 8 --- Reset the SWITCHED flag of the protection switch
- 9 --- Set the protection switch to SW-2TO1

Example: 'prsw=312' sets the protection 12 switch to SW-ALWAYS.

For 2:1 protection switches, you have to command the position of both switches involved in order to set the redundant chain destination to CHAIN-A (B/A), CHAIN-B (A/B) or none (A/A).

5 Connector Reference

Connector layout IO-FEP

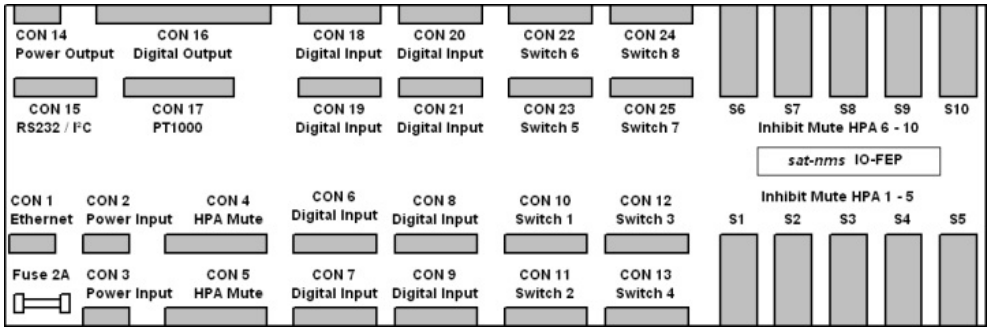

Connector layout IO-FEP-E

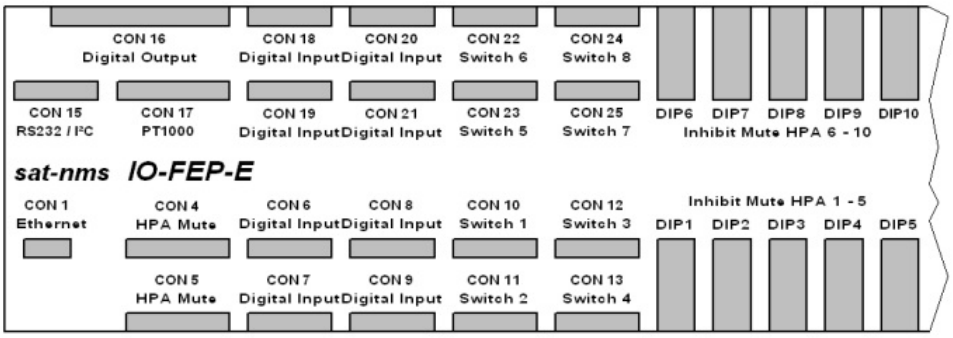

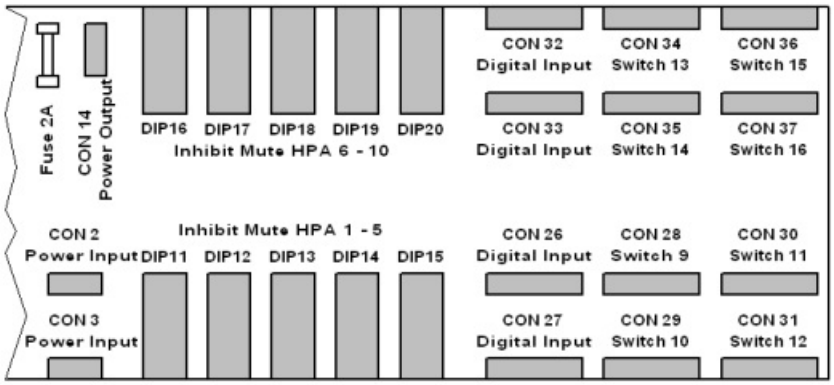

CON1 LAN

Pin	*Identifier*	*Description*	*Type*	*Remark*
1	TX+	default Ethernet cabling (10Base-T)	OUT	
2	TX-		OUT	
3	RX+		IN	
4				
5				
6	RX-		IN	
7				
8				

CON2 power input

Pin	*Identifier*	*Description*	*Type*	*Remark*
1	24V DC	voltage input for IO-FEP	DC in	
2	GND DC		DC in	
3	24V EXT	voltage input for WG Switches etc.	DC in	
4	GND EXT		DC in	

CON3 power input

Pin	*Identifier*	*Description*	*Type*	*Remark*
1	24V DC	voltage input for IO-FEP	DC in	
2	GND DC		DC in	
3	24V EXT	voltage input for WG Switches etc.	DC in	
4	GND EXT		DC in	

CON4 HPA mute

Pin	Identifier	Description	Type	Remark
1	MUT IN1	HPA 1 mute in	DC in	
2	MUT OUT1	HPA 1 mute out	DC out	JP1: 1-2 SW mute / d-out, 2-3 HW mute
3	MUT IN2	HPA 2 mute in	DC in	
4	MUT OUT2	HPA 2 mute out	DC out	JP2: 1-2 SW mute / d-out, 2-3 HW mute
5	MUT IN3	HPA 3 mute in	DC in	
6	MUT OUT3	HPA 3 mute out	DC out	JP3: 1-2 SW mute / d-out, 2-3 HW mute
7	MUT IN4	HPA 4 mute in	DC in	
8	MUT OUT4	HPA 4 mute out	DC out	JP4: 1-2 SW mute / d-out, 2-3 HW mute
9	MUT IN5	HPA 5 mute in	DC in	
10	MUT OUT5	HPA 5 mute out	DC out	JP5: 1-2 SW mute / d-out, 2-3 HW mute

CON5 HPA mute

Pin	Identifier	Description	Type	Remark
1	MUT IN6	HPA 6 mute in	DC in	
2	MUT OUT6	HPA 6 mute out	DC out	JP6: 1-2 SW mute / d-out, 2-3 HW mute
3	MUT IN7	HPA 7 mute in	DC in	
4	MUT OUT7	HPA 7 mute out	DC out	JP7: 1-2 SW mute / d-out, 2-3 HW mute
5	MUT IN8	HPA 8 mute in	DC in	
6	MUT OUT8	HPA 8 mute out	DC out	JP8: 1-2 SW mute / d-out, 2-3 HW mute
7	MUT IN9	HPA 9 mute in	DC in	
8	MUT OUT9	HPA 9 mute out	DC out	JP9: 1-2 SW mute / d-out, 2-3 HW mute
9	MUT IN10	HPA 10 mute in	DC in	
10	MUT OUT10	HPA 10 mute out	DC out	JP10: 1-2 SW mute / d-out, 2-3 HW mute

CON6 digital input

Pin	Identifier	Description	Type	Remark
1	DIN 1	digital input	input	
2	GND	refenece voltage	DC out	
3	DIN 2	digital input	input	
4	GND	refenece voltage	DC out	
5	DIN 3	digital input	input	
6	GND	refenece voltage	DC out	
7	DIN 4	digital input	input	
8	GND	refenece voltage	DC out	

CON7 digital input

Pin	Identifier	Description	Type	Remark
1	DIN 5	digital input	input	
2	GND	refenece voltage	DC out	
3	DIN 6	digital input	input	
4	GND	refenece voltage	DC out	
5	DIN 7	digital input	input	
6	GND	refenece voltage	DC out	
7	DIN 8	digital input	input	
8	GND	refenece voltage	DC out	

CON8 digital input

Pin	Identifier	Description	Type	Remark
1	DIN 9	digital input	input	
2	GND	refenece voltage	DC out	
3	DIN 10	digital input	input	
4	GND	refenece voltage	DC out	
5	DIN 11	digital input	input	
6	GND	refenece voltage	DC out	
7	DIN 12	digital input	input	
8	GND	refenece voltage	DC out	

CON9 digital input

Pin	Identifier	Description	Type	Remark

1	DIN 13	digital input	input	
2	GND	refenece voltage	DC out	
3	DIN 14	digital input	input	
4	GND	refenece voltage	DC out	
5	DIN 15	digital input	input	
6	GND	refenece voltage	DC out	
7	DIN 16	digital input	input	
8	GND	refenece voltage	DC out	

CON10 waveguideswitch 1

Pin	*Identifier*	*Description*	*Type*	*Remark*
1	POS A 1	set position A	DC out	
2	GND_EXT	com	DC out	
3	POS B 1	set position B	DC out	
4	IND A 1	indication position A	DC out	
5	GND_EXT	com	DC out	
6	IND B 1	indication position B	DC out	
7	INH 1	inhibit	DC out	
8	GND_EXT	inhibit	DC in	

CON11 waveguideswitch 2

Pin	*Identifier*	*Description*	*Type*	*Remark*
1	POS A 2	set position A	DC out	
2	GND_EXT	com	DC out	
3	POS B 2	set position B	DC out	
4	IND A 2	indication position A	DC out	
5	GND_EXT	com	DC out	
6	IND B 2	indication position B	DC out	
7	INH 2	inhibit	DC out	
8	GND_EXT	inhibit	DC in	

CON12 waveguideswitch 3

Pin	*Identifier*	*Description*	*Type*	*Remark*

1	POS A 3	set position A	DC out	
2	GND_EXT	com	DC out	
3	POS B 3	set position B	DC out	
4	IND A 3	indication position A	DC out	
5	GND_EXT	com	DC out	
6	IND B 3	indication position B	DC out	
7	INH 3	inhibit	DC out	
8	GND_EXT	inhibit	DC in	

CON13 waveguideswitch 4

Pin	*Identifier*	*Description*	*Type*	*Remark*
1	POS A 4	set position A	DC out	
2	GND_EXT	com	DC out	
3	POS B 4	set position B	DC out	
4	IND A 4	indication position A	DC out	
5	GND_EXT	com	DC out	
6	IND B 4	indication position B	DC out	
7	INH 4	inhibit	DC out	
8	GND_EXT	inhibit	DC in	

CON14_Power_output

Pin	*Identifier*	*Description*	*Type*	*Remark*
1	24V EXT	spare outputs	DC out	
2	24V EXT		DC out	
3	GND EXT		DC out	
4	GND EXT		DC out	

CON15 RS232 I2C

Pin	*Identifier*	*Description*	*Type*	*Remark*
1	RS232 0 TX	RS232 access 0	output	
2	RS232 0 RX		input	
3	GND		DC out	
4	RS232 1 TX	RS232 access 1	output	
5	RS232 1 RX		input	

6	I2C SDA	I²C data	output	
7	I2C SCL	I²C clock	output	
8	GND		DC out	

CON16 digital out

Pin	*Identifier*	*Description*	*Type*	*Remark*
1	COM 1		input	
2	COM 2		input	
3	OUT 11	switched COM1	output	
4	COM 2		input	
5	OUT 12	switched COM1	output	
6	COM 2		input	
7	OUT 13	switched COM1	output	
8	COM 2		input	
9	COM 4		input	
10	OUT 14	switched COM4	output	
11	COM 5		input	
12	OUT 15	switched COM5	output	
13	COM 6		input	
14	OUT 16	switched COM6	output	

CON17 external temperature sensors

Pin	*Identifier*	*Description*	*Type*	*Remark*
1	SENS OUT1	output to PT1000	DC out	
2	SENS IN1	input to PT1000	DC in	
3	SENS OUT2	output to PT1000	DC out	
4	SENS IN2	input to PT1000	DC in	
5	SENS OUT3	output to PT1000	DC out	
6	SENS IN3	input to PT1000	DC in	
7	SENS OUT4	output to PT1000	DC out	
8	SENS IN4	input to PT1000	DC in	

CON18 digital input

Pin	Identifier	Description	Type	Remark
1	DIN 17	digital input	input	
2	GND	refenece voltage	DC out	
3	DIN 18	digital input	input	
4	GND	refenece voltage	DC out	
5	DIN 19	digital input	input	
6	GND	refenece voltage	DC out	
7	DIN 20	digital input	input	
8	GND	refenece voltage	DC out	

CON19 digital input

Pin	Identifier	Description	Type	Remark
1	DIN 21	digital input	input	
2	GND	refenece voltage	DC out	
3	DIN 22	digital input	input	
4	GND	refenece voltage	DC out	
5	DIN 23	digital input	input	
6	GND	refenece voltage	DC out	
7	DIN 24	digital input	input	
8	GND	refenece voltage	DC out	

CON20 digital input

Pin	Identifier	Description	Type	Remark
1	DIN 25	digital input	input	
2	GND	refenece voltage	DC out	
3	DIN 26	digital input	input	
4	GND	refenece voltage	DC out	
5	DIN 27	digital input	input	
6	GND	refenece voltage	DC out	
7	DIN 28	digital input	input	
8	GND	refenece voltage	DC out	

CON21 digital input

Pin	Identifier	Description	Type	Remark

1	DIN 29	digital input	input	
2	GND	refenece voltage	DC out	
3	DIN 30	digital input	input	
4	GND	refenece voltage	DC out	
5	DIN 31	digital input	input	
6	GND	refenece voltage	DC out	
7	DIN 32	digital input	input	
8	GND	refenece voltage	DC out	

CON22 waveguideswitch 6

Pin	*Identifier*	*Description*	*Type*	*Remark*
1	POS A 6	set position A	DC out	
2	GND_EXT	com	DC out	
3	POS B 6	set position B	DC out	
4	IND A 6	indication position A	DC out	
5	GND_EXT	com	DC out	
6	IND B 6	indication position B	DC out	
7	INH 6	inhibit	DC out	
8	GND_EXT	inhibit	DC in	

CON23 waveguideswitch 5

Pin	*Identifier*	*Description*	*Type*	*Remark*
1	POS A 5	set position A	DC out	
2	GND_EXT	com	DC out	
3	POS B 5	set position B	DC out	
4	IND A 5	indication position A	DC out	
5	GND_EXT	com	DC out	
6	IND B 5	indication position B	DC out	
7	INH 5	inhibit	DC out	
8	GND_EXT	inhibit	DC in	

CON24 waveguideswitch 8

Pin	*Identifier*	*Description*	*Type*	*Remark*

1	POS A 8	set position A	DC out	
2	GND_EXT	com	DC out	
3	POS B 8	set position B	DC out	
4	IND A 8	indication position A	DC out	
5	GND_EXT	com	DC out	
6	IND B 8	indication position B	DC out	
7	INH 8	inhibit	DC out	
8	GND_EXT	inhibit	DC in	

CON25 waveguideswitch 7

Pin	*Identifier*	*Description*	*Type*	*Remark*
1	POS A 7	set position A	DC out	
2	GND_EXT	com	DC out	
3	POS B 7	set position B	DC out	
4	IND A 7	indication position A	DC out	
5	GND_EXT	com	DC out	
6	IND B 7	indication position B	DC out	
7	INH 7	inhibit	DC out	
8	GND_EXT	inhibit	DC out	

the following connectors can only be found on the IO-FEP-E

CON26 digital input

Pin	*Identifier*	*Description*	*Type*	*Remark*
1	DIN 33	digital input	input	
2	GND	refenece voltage	DC out	
3	DIN 34	digital input	input	
4	GND	refenece voltage	DC out	
5	DIN 35	digital input	input	
6	GND	refenece voltage	DC out	
7	DIN 36	digital input	input	
8	GND	refenece voltage	DC out	

CON27 digital input

Pin	Identifier	Description	Type	Remark
1	DIN 37	digital input	input	
2	GND	refenece voltage	DC out	
3	DIN 38	digital input	input	
4	GND	refenece voltage	DC out	
5	DIN 39	digital input	input	
6	GND	refenece voltage	DC out	
7	DIN 40	digital input	input	
8	GND	refenece voltage	DC out	

CON28 waveguideswitch 9

Pin	Identifier	Description	Type	Remark
1	POS A 9	set position A	DC out	
2	GND_EXT	com	DC out	
3	POS B 9	set position B	DC out	
4	IND A 9	indication position A	DC out	
5	GND_EXT	com	DC out	
6	IND B 9	indication position B	DC out	
7	INH 9	inhibit	DC out	
8	GND_EXT	inhibit	DC out	

CON29 waveguideswitch 10

Pin	Identifier	Description	Type	Remark
1	POS A 10	set position A	DC out	
2	GND_EXT	com	DC out	
3	POS B 10	set position B	DC out	
4	IND A 10	indication position A	DC out	
5	GND_EXT	com	DC out	
6	IND B 10	indication position B	DC out	
7	INH 10	inhibit	DC out	
8	GND_EXT	inhibit	DC out	

CON30 waveguideswitch 11

Pin	Identifier	Description	Type	Remark

1	POS A 11	set position A	DC out	
2	GND_EXT	com	DC out	
3	POS B 11	set position B	DC out	
4	IND A 11	indication position A	DC out	
5	GND_EXT	com	DC out	
6	IND B 11	indication position B	DC out	
7	INH 11	inhibit	DC out	
8	GND_EXT	inhibit	DC out	

CON31 waveguideswitch 12

Pin	*Identifier*	*Description*	*Type*	*Remark*
1	POS A 12	set position A	DC out	
2	GND_EXT	com	DC out	
3	POS B 12	set position B	DC out	
4	IND A 12	indication position A	DC out	
5	GND_EXT	com	DC out	
6	IND B 12	indication position B	DC out	
7	INH 12	inhibit	DC out	
8	GND_EXT	inhibit	DC out	

CON32 digital input

Pin	*Identifier*	*Description*	*Type*	*Remark*
1	DIN 41	digital input	input	
2	GND	refenece voltage	DC out	
3	DIN 42	digital input	input	
4	GND	refenece voltage	DC out	
5	DIN 43	digital input	input	
6	GND	refenece voltage	DC out	
7	DIN 44	digital input	input	
8	GND	refenece voltage	DC out	

CON33 digital input

Pin	*Identifier*	*Description*	*Type*	*Remark*

1	DIN 45	digital input	input	
2	GND	refenece voltage	DC out	
3	DIN 46	digital input	input	
4	GND	refenece voltage	DC out	
5	DIN 47	digital input	input	
6	GND	refenece voltage	DC out	
7	DIN 48	digital input	input	
8	GND	refenece voltage	DC out	

CON34 waveguideswitch 13

Pin	*Identifier*	*Description*	*Type*	*Remark*
1	POS A 13	set position A	DC out	
2	GND_EXT	com	DC out	
3	POS B 13	set position B	DC out	
4	IND A 13	indication position A	DC out	
5	GND_EXT	com	DC out	
6	IND B 13	indication position B	DC out	
7	INH 13	inhibit	DC out	
8	GND_EXT	inhibit	DC out	

CON35 waveguideswitch 14

Pin	*Identifier*	*Description*	*Type*	*Remark*
1	POS A 14	set position A	DC out	
2	GND_EXT	com	DC out	
3	POS B 14	set position B	DC out	
4	IND A 14	indication position A	DC out	
5	GND_EXT	com	DC out	
6	IND B 14	indication position B	DC out	
7	INH 14	inhibit	DC out	
8	GND_EXT	inhibit	DC out	

CON36 waveguideswitch 15

Pin	*Identifier*	*Description*	*Type*	*Remark*
1	POS A 15	set position A	DC out	

2	GND_EXT	com	DC out	
3	POS B 15	set position B	DC out	
4	IND A 15	indication position A	DC out	
5	GND_EXT	com	DC out	
6	IND B 15	indication position B	DC out	
7	INH 15	inhibit	DC out	
8	GND_EXT	inhibit	DC out	

CON37 waveguideswitch 16

Pin	*Identifier*	*Description*	*Type*	*Remark*
1	POS A 16	set position A	DC out	
2	GND_EXT	com	DC out	
3	POS B 16	set position B	DC out	
4	IND A 16	indication position A	DC out	
5	GND_EXT	com	DC out	
6	IND B 16	indication position B	DC out	
7	INH 16	inhibit	DC out	
8	GND_EXT	inhibit	DC out	

6 Specifications

Specifications IO-FEP

General Interfaces	qty	Connector No.	remark
System Interfaces			All interfaces (except the Ethernet-interface) have to be connected via Mini Combicon MCV1,5/XX-G-3,5
external Temperature measurement	4	17	via external PT1000 sensors, accuracy +/- 3°C, range: -40 to +60°C
internal Temperature measurement	1	---	via internal on-chip-sensor, accurancy +/-3°C
internal clock/ calendar	1	---	real-time clock/ calendar. If power supply is missing, a goldcap capacitor keeps the clock running for min. 7 days

digital input	32	6, 7, 8, 9, 18, 19, 20, 21	via optocoupler, indication current: ~3mA @ 24V DC
digital output	6	16	relay contacts, max. continuous current: 1A, max continuous voltage: 24V DC
HPA-muting/ digital output	10	4, 5	Photomos-relays, per relay max. continuous current: 130mA, max. continuous voltage: 48V, on-state-restistance ~25Ohm
HPA-muting matrix	10x8		software HPA-muting or DIP-switches for hardware-HPA-muting
waveguide-switching	8	10, 11, 12, 13, 22, 23, 24, 25	maximum peak switching current: 5A
waveguide-indication	8		via optocoupler, indication current: ~3mA @ 24V DC
inhibit-indication	8		indication current ~5mA @ 24V DC
power output	1	14	24V DC, max 500mA
I²C	1	15	for special requirements, only usable with customized Software
RS232	1	15	for controlling the IO-FEP
Ethernet	1	1	RJ45, 10/100-Base-T, for controlling the IO-FEP via HTTP GET or any Web-browser

M&C Interface Specification

interface for M&C and user			10/ 100-Base-T, Via HTTP GET requests, RS232, SNMP

Electrical and Mechanical Specification, Environmental conditions

		Connector	
Supply Voltage			24 V unregulated D/C
Power consumption 24V DC		2, 3	max. 150mA
Power consumption 24V EXT		2, 3	max. 450mA (excluding power output at CON14 and the switching current of the waveguide switches)
Temperature range			5° to 50° C
Humidity			up to 90% non condensing

DIN rail module			264 x 165 x 60 mm
Weight			1,5 kg

Specifications IO-FEP-E

General Interfaces	qty	Connector No.	remark
System Interfaces			All interfaces (except the Ethernet-interface) have to be connected via Mini Combicon MCV1,5/XX-G-3,5
external Temperature measurement	4	17	via external PT1000 sensors, accuracy +/- 3°C, range: -40 to +60°C
internal Temperature measurement	1	---	via internal on-chip-sensor, accurancy +/- 3°C
internal clock/ calendar	1	---	real-time clock/ calendar. If power supply is missing, a goldcap capacitor keeps the clock running for min. 7 days
digital input	48	6, 7, 8, 9, 18, 19, 20, 21, 26, 27, 32, 33	via optocoupler, indication current: ~3mA @ 24V DC
digital output	6	16	relay contacts, max. continuous current: 1A, max continuous voltage: 24V DC
HPA-muting/ digital output	10	4, 5	Photomos-relays, per relay max. continuous current: 130mA, max. continuous voltage: 48V, on-state-restistance ~25Ohm
HPA-muting matrix	10x16		software HPA-muting or DIP-switches for hardware-HPA-muting
waveguide-switching	16	10, 11, 12, 13, 22, 23, 24, 25, 28, 29, 30, 31, 34, 35, 36, 37	maximum peak switching current: 5A
waveguide-indication	16		via optocoupler, indication current: ~3mA @ 24V DC
inhibit-indication	16		indication current ~5mA @ 24V DC
power output	1	14	24V DC, max 500mA
I²C	1	15	for special requirements, only usable with customized Software

RS232	1	15	for controlling the IO-FEP
Ethernet	1	1	RJ45, 10/100-Base-T, for controlling the IO-FEP via HTTP GET or any Web-browser

M&C Interface Specification

interface for M&C and user			10/ 100-Base-T, Via HTTP GET requests, RS232, SNMP

Electrical and Mechanical Specification, Environmental conditions

		Connector	
Supply Voltage			24 V unregulated D/C
Power consumption 24V DC		2, 3	max. 200mA
Power consumption 24V EXT		2, 3	max. 650mA (excluding power output at CON14 and the switching current of the waveguide switches)
Temperature range			5° to 50° C
Humidity			up to 90% non condensing
DIN rail module			434 x 165 x 60 mm
Weight			2,2 kg